OEM Automatic Ltd
Address: Whiteacres, Whetstone Leicester, LE8 6ZG
0116 284 9900 | Orders@oem.co.uk | www.oem.co.uk

GRAB HANDLE/HAND RAIL

575040
End piece for handrail/grab handle, PA6GF30

- PVC coated steel
- Parts separate
- Various lengths

PRODUCT DESCRIPTION

Can be used as a handrail or as a sturdy handle both vertically and horizontally. Several lengths are available to choose from. Use two end pieces for one length of pipe. If a pipe length longer than 466mm is used, this should be supplemented with at least one middle piece.
Add 68mm to the pipe length to obtain the total length with end pieces.
The end and side pieces can be attached with a screw with a hexagonal head, an allen screw with a cylindrical head or a countersunk screw.

TECHNICAL DATA
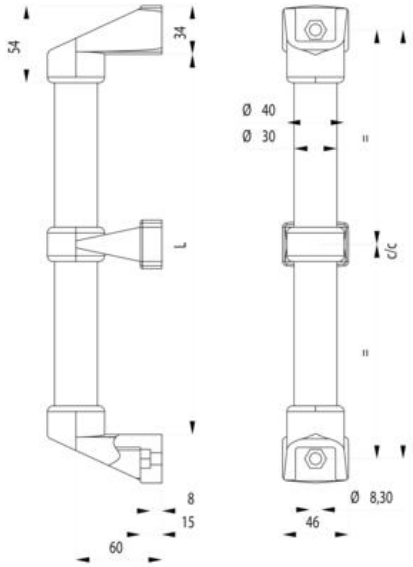
Material	PA6